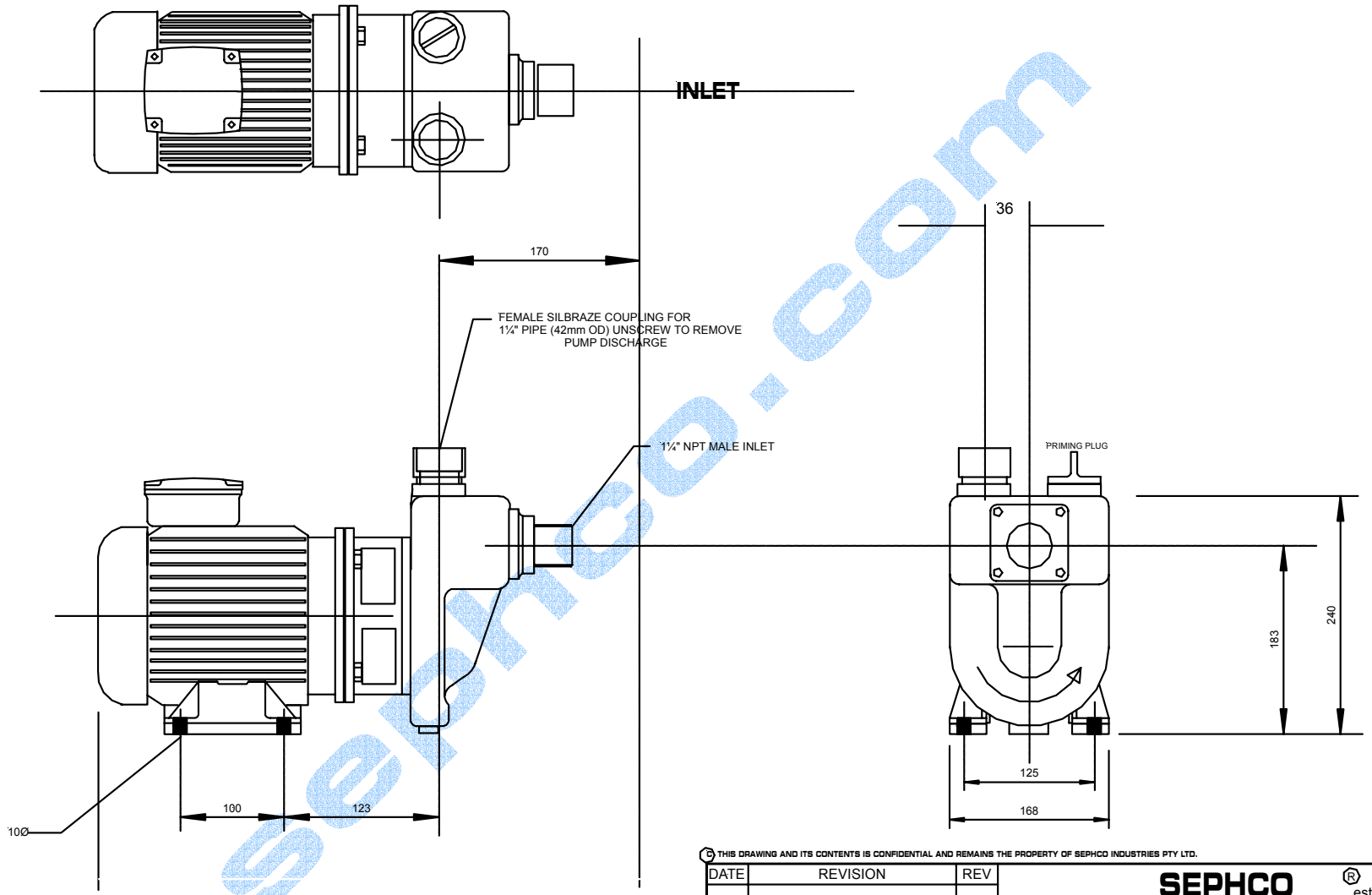

WEIGHT : 30 KG (66 lbs)
MOTOR : 1.1KW 2POLE

© THIS DRAWING AND ITS CONTENTS IS CONFIDENTIAL AND REMAINS THE PROPERTY OF SEPHCO INDUSTRIES PTY LTD.

DATE	REVISION	REV

SEPHCO ® est. 1946

SEPHCO IND. PTY LTD

www.sephco.com e-mail: sales@sephco.com

LSMC BASIC PUMP DETAILS

CLIENT	
PROJECT	
JOB NO.	
REFERENCE DRAWINGS	

DRAWN	DRAWING NO.	REV No.
22.04.04	SPP7291	

© Copyright 2004 Sephco Industries. All Rights Reserved